LCC & OGL

Lubrication systems brochure

SD

CONSULTING





LCC – Oil Lubrication, Circulation and Cooling

General info – Informazioni Generali

LCC-G for gearboxes

LCC-SR for supports for rollers application – Rotary tube

Magnetic filter for LCC (available also dedicated file)

OGL – Open Gear Lubrication

General info – Informazioni Generali

Automation Package OGL+A1 – OGL+A2

SGC – Special Gear Coating (dedicated brochure 81f8ab_c8df37e0b7f44aa18fef4d4f52a92b6f.pdf)

LCC-G; OIL LUBRICATION, CIRCULATION, COOLING Gearboxes

Different types of LCC can be design and The selection of a lubrication system depends on the different parameters, such as: application, gear speed, installed power, operating time and ambient temperature.

The most common are the following:

- **OWC**: Oil **Water** Cooling and circulation system
- **OAC**: Oil **Air** Cooling and circulation system
- **ONC**: Oil **None** Cooling and circulation system
    - **Low pressure** pumping station
    - **High pressure** pumping station

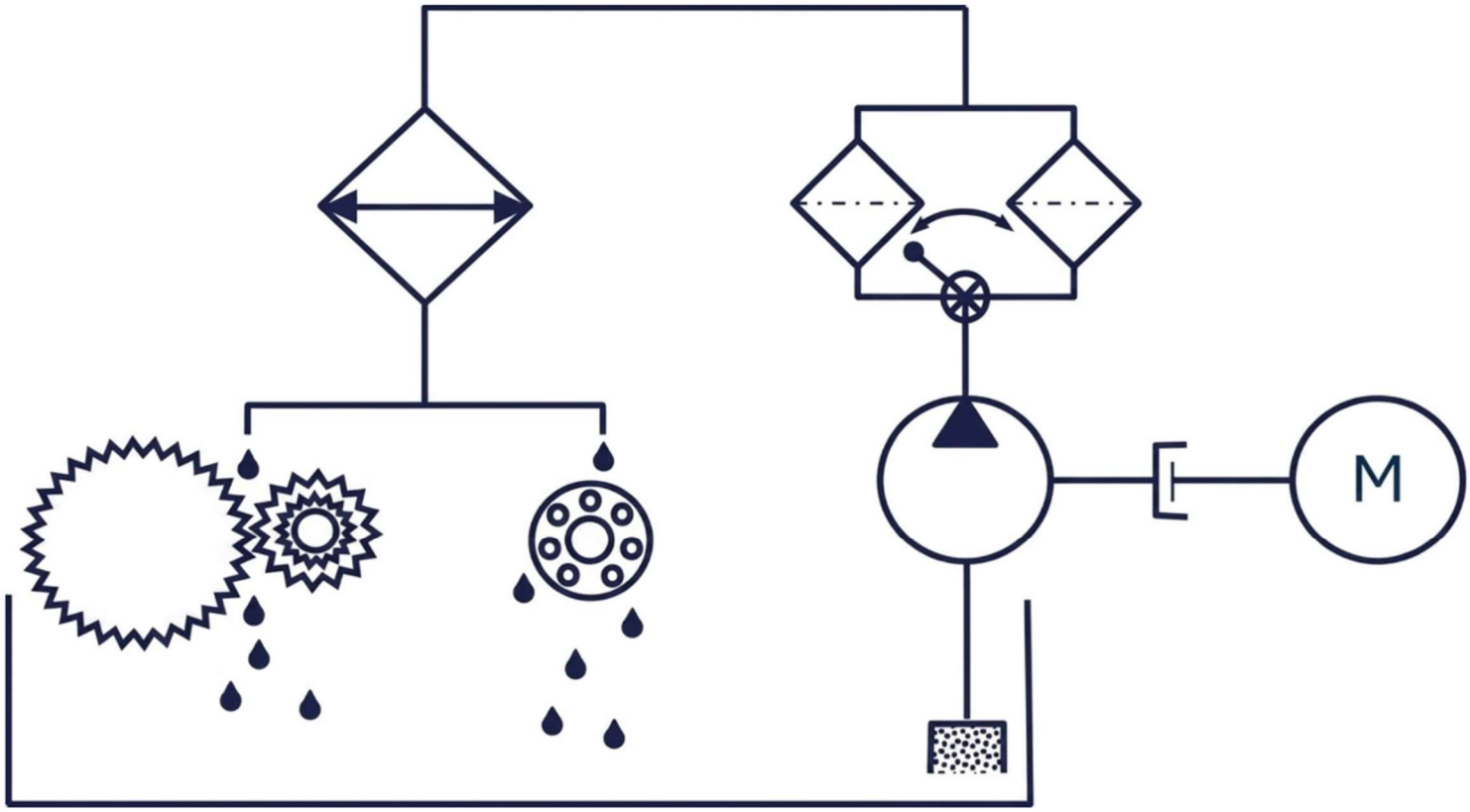

Gears and bearings usually are lubricated with the same oil.

LCC-G are custom made and can be equipped with all the sensors the application and our customers require.

LCC-G WITH OIL TANK INTO THE GB

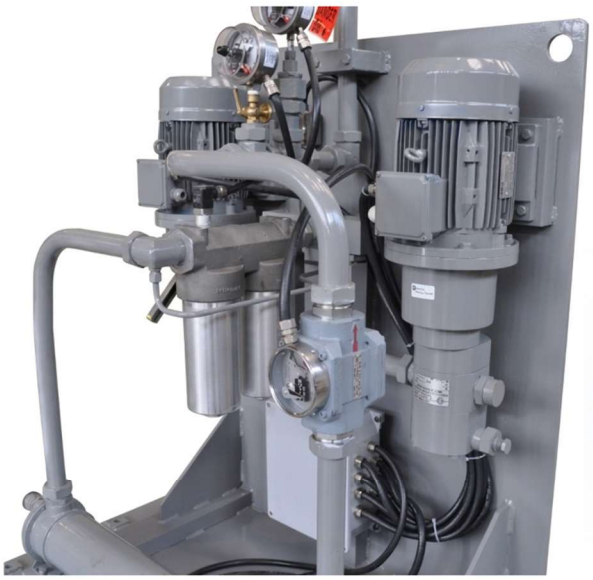

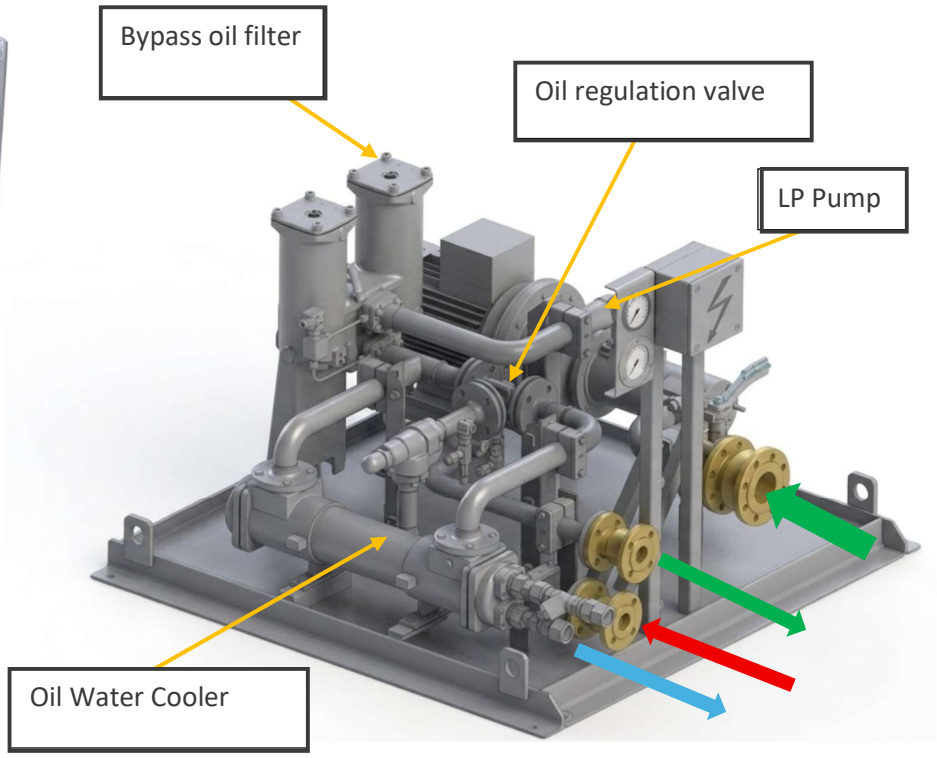

LCC-G WITH OIL external TANK for the GB

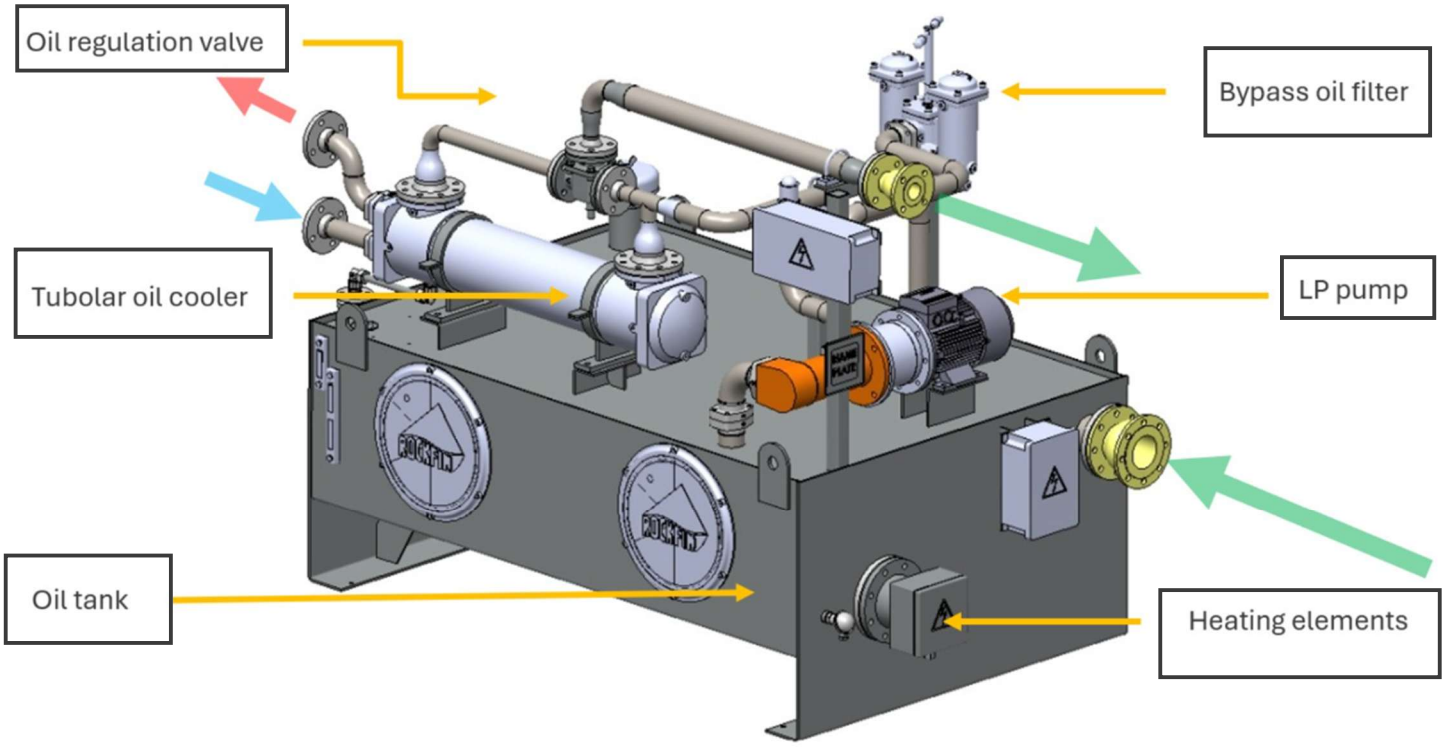

For any information not mentioned in the catalogue please contact our team

LCC-SR; OIL LUBRICATION, CIRCULATION, COOLING Supports for Rollers application Rotary tube

According to the expience we had in many years on the cement and rotary drum equipment it has been developed a dedicated system for the support of rollers for tyres.

This system is developed in order to accomplish all the needs of this application and it is composed as follow:

a) Motor pump for recirculating
b) Filters and control (double with bypass for cartridge + magnetic)
c) Controls (flow, pressure, temperature)
d) Heat exchanger (OWC Oil-Water-Cooler) with bypass that works only after the oil will reach the setted temperature

Advantages:

1. Better performance of the tyres and rollers due to high quality lubrication method
2. Longer lifetime of the lubricant due to filtering system and cooling
3. Better efficiency of the rotary tube



LCC-MF; MAGNETIC FILTER SOLUTION

TECHNICAL SOLUTION

- The tested solution that permit to have the best result is the stick one with nickel treatment in neodymion with high captation power.
- The proposed solution is able to work until 250lit/min oil flow.
- Results can be check since the beginning. First check can be done after 200w/hrs

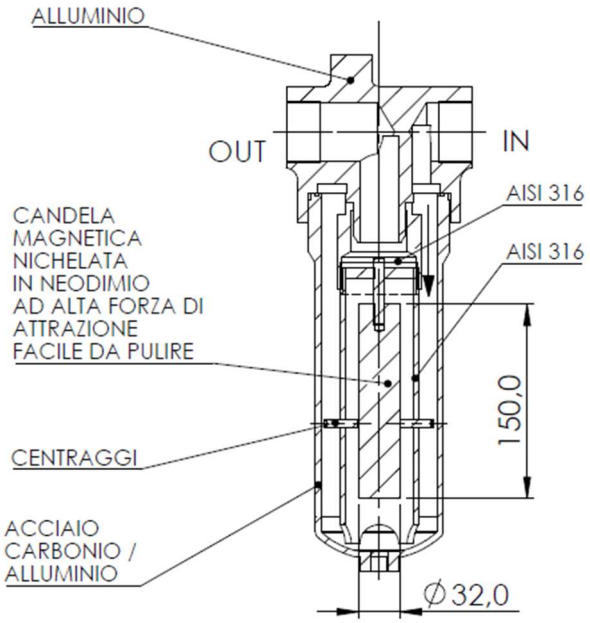

Advantages

Magnetic filtration allowed to remove as much as possible the iron particles into the lubricant, these particles are the most pollutant we can have.

*Remove these particles into the lubricant allowed the system to increase the lifetime of the lubricant itself and the component as well. Estimation of extended lifetime is *1,5 of the actual*

It is an easy solution to be installed and user-friendly to be check; it can be installed in every forced lubrication system.

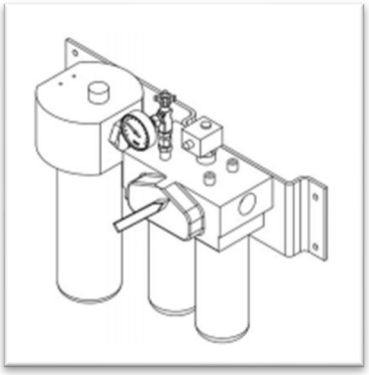

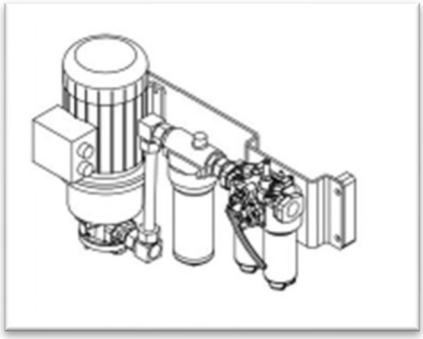

For any information not mentioned in the catalogue please contact our team

OGL – OPEN GEAR LUBRICATION SYSTEM

The system is designed for high-viscosity lubricants and it has been developed collecting all the needs and experience from our expertise.

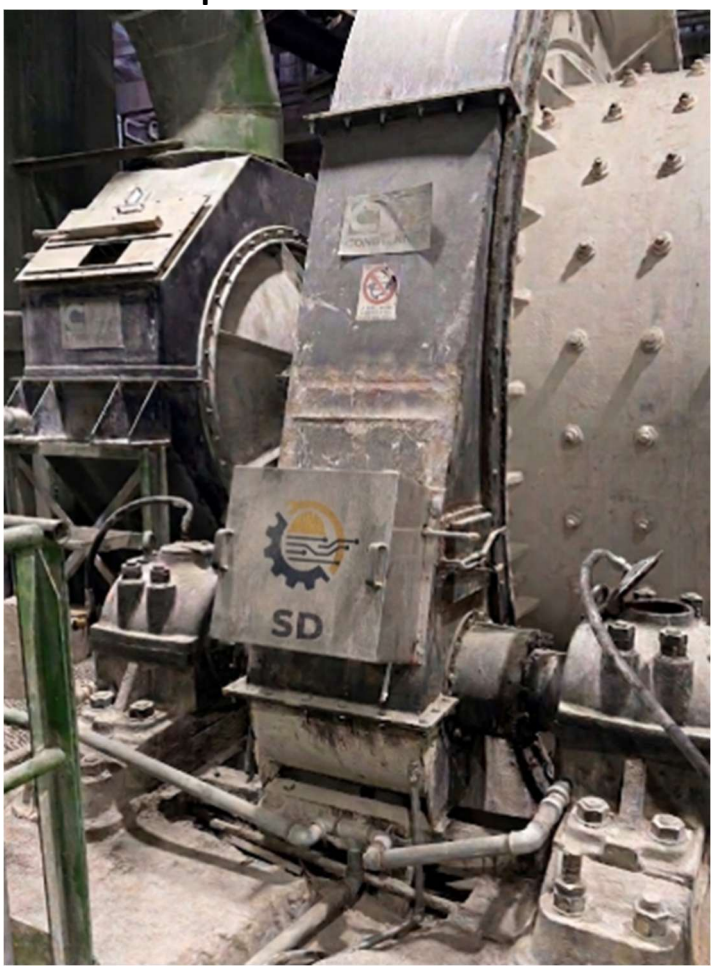

General features

Adjustable sprayers

The sprayers can be adjusted in two directions to ensure the best possible positioning and an even coating of lubrication across the gear. Movement is controlled via the grease distribution panel. The grease distribution panel includes an electrical pressure switch at sprayers.

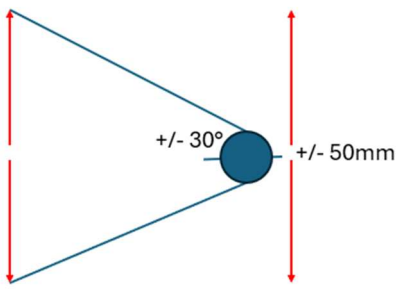

Increased pipe diameter
The new lubrication pump uses pipes measuring 13 mm internal diameter. This increased opening enables smoother flow of the high-viscosity lubricants through the pipe, easing application and preventing blockages.

Simple set-up
The pump comes equipped with three preset phases, making it easy to switch between start-up, normal running conditions, and emergency settings. We'll calculate the optimum quantity of lubricants in each of these conditions. As optional is available the local control panel for the system.

Easy-clean application
Using air to propel the grease also gives us an easy means of cleaning and emptying the nozzle to prevent build-up and blockages, which can result in an under-lubricated gear. Not only does the airflow avoid the catastrophic chain of events that can arise from lack of lubrication, but it also eliminates much of the maintenance time spent trying to manually clean the nozzles.
Fits in place
The system is designed for a drop-in installation.

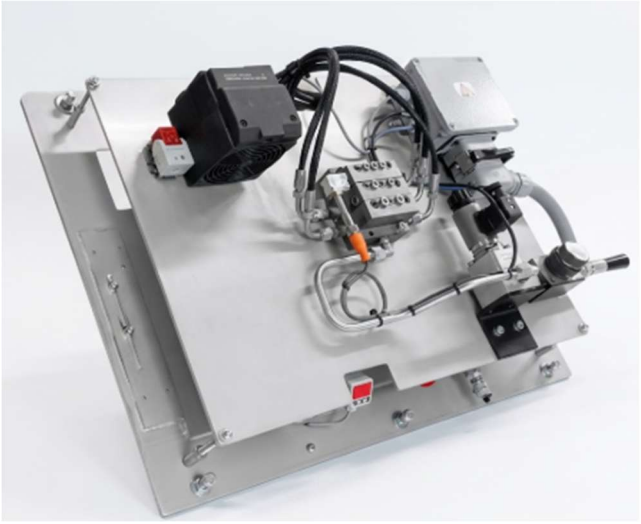



- pump for 180 kg tank including sensor for min.-max. superminimum grease level in tank.
- Air group: with electro valve, pressure switch and filter for pressure regulation + electro valve bypass.
- Grease distribution panel with cover sealing system, ventilated heater with thermostat (15 – 20°C local temperature), and electrical pressure switch (2 signal on/off).
- The number of sprayers will be defined according to the application.

OGL HAS BEEN APPROVED FOR HIGH VISCOSITY LUBRICANT FROM THE MAIN LUBRICANTS COMPANY AFTER SEVERAL ENDURANCE TEST EVEN WITH LOW TEMPERATURE IN CLIMATIC CHAMBER

OGL+A1/OGL+A2 – Automation package

Scope

The scope of this automation package is to increase the safety of your components and ensure that all the needed actions/adjustments (in case of needs) will be done immediately without any delay that cause potential issue on your machine.

Very often the operator discover too late that is required an adjustment into the setup of the working system due to abnormal working condition.

This OGL Automation Package will do it automatically.



OGL + AP1

- Standard OGL package
- Specific Local Control Cabinet
- Dedicated PLC **with automation logics setted**
- **Thermocamera** // Infrared + Air flow to clean it
- Accelerometers / Single or 3 axis available

OGL + AP2

- Standard OGL package
- Automation package step 1
- **Extra module on PLC**
- **Inductive sensors for radial and axial run out**

SD CONSULTING OGL+AP SOLUTION, HOW IT WORKS, "FIELD AND LOGICS"

OGL + AP – FIELD

OGL is set as standard with 3 working mode

- Standard working condition (SWC)
- Emergency working condition (EWC)
- Run-in working condition (RWC)

Dedicated Local Control Panell

- Setting according to UNI-ISO 20816 or specific customer schema

Thermocamera

- Infrared
- Air flow to clean it

Accelerometers

OGL + AP – LOGICS

The system works with "IF" rules

- **IF vibration** on the pinion exceed the set limit
- Or **IF temperature** on the pinion will exceed the set limit
- **Exceeding** a certain minimum working period
- The system **will automatically** change from SWC to EWC or RWC
- Operator receive a signal that system change the duty
- System will record every changing (no readings are available for Continuos Monitoring System)



SD

SD

SD Consulting SRL: Eccellenza tecnica e soluzioni all'avanguardia per le trasmissioni meccaniche nell'industria pesante.

Contatti

Tel: +39 392 431 4682
Email: stefania@pt-trading.it
Sede operativa: Via Talete, 47, Brugherio (MB)

Legal

© Copyright SD Consulting SRL. Tutti i diritti riservati.
P.IVA 12345678901